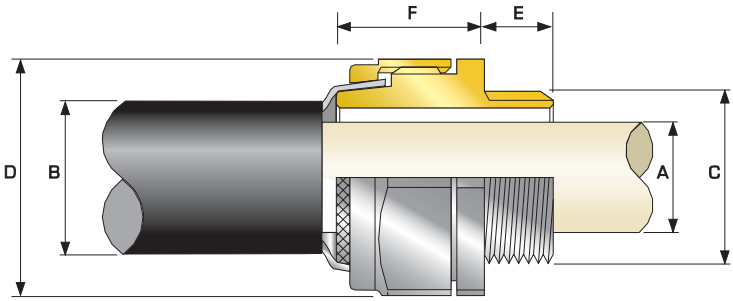

BW

BW Industrial Cable Gland

For all types of Steel & Aluminium Wire Armoured Cables

- High quality durable materials
- Simple, effective two part arrangement
- Direct & remote installation
- Permanently crimped, low impedance earth termination
- Secure against self-loosening
- -60˚C to +200˚C
- EMC tested

TECHNICAL DATA	
Design Specification	BS 6121:Part 1:1989
Mechanical Classifications*	Impact = Level 8, Retention = Class D
Enclosure Protection	IK10 to IEC 62262 (20 joules)
Electrical Classifications*	Category B
GOST R Certificate	РОСС GB.ГБ 05.H00187
GOST K Certificate	KZ 7500361.01.01.25266
RoK Permit For Use	19-02-UL-1957
Marine Approvals	LRS: 01/00171 (E1), ABS: 01-LD234401/2-PDA
Continuous Operating Temperature	-60°C to +200°C
Ingress Protection Rating	IP2X**
Cable Gland Material	Brass, Electroless Nickel Plated Brass
Cable Type	Single Wire Armour (SWA), Aluminium Wire Armour (AWA)
Armour Clamping	Two Part Armour Lock
Cable Gland Kits Available	Cable Gland Kit for use with all types of SWA cable, including 2 Brass Cable Glands, 2 Steel Locknuts, 2 Brass Earth Tags and 2 PVC Shrouds for sizes up to and including 32mm. For sizes 40mm and above each kit includes 1 of each component.

*Note : * Mechanical & Electrical Classifications applied as per IEC 62444 & EN 62444*
As IEC 62444 and EN 62444 do not cover cable glands which are supplied without cable sealing rings, the information provided here is for information only.
*Note : ** Refer to page 7 or www.cmp-products.com for further information on Ingress Protection Ratings*

Cable Gland Selection Table

Refer to illustration at the top of the page

Cable Gland Size	Available Entry Threads "C" (Alternate Metric Thread Lengths Available)		Cable Bedding Diameter "A"	Overall Cable Diameter "B"	Armour Range		Across Flats "D"	Across Corners "D"	Protrusion Length "F"	Combined Ordering Reference (*Brass Metric)			Shroud	Cable Gland Weight (Kgs)
	Metric	Thread Length (Metric) "E"	Max	Max	Min	Max	Max	Max		Size	Type	Ordering Suffix		
20S	M20	10.0	11.7	15.8	0.8	1.25	22.0	24.2	18.5	20S	BW	1AA	PVC02	0.052
20	M20	10.0	14.0	21.1	0.8	1.25	28.0	30.8	22.5	20	BW	1AA	PVC05	0.088
25	M25	10.0	20.0	27.2	1.25	1.6	33.0	36.3	21.5	25	BW	1AA	PVC07	0.110
32	M32	10.0	26.3	34.1	1.6	2.0	41.0	45.1	22.5	32	BW	1AA	PVC10	0.149
40	M40	15.0	32.2	42.4	1.6	2.0	50.0	55.0	30.0	40	BW	1AA	PVC13	0.316
50S	M50	15.0	38.2	50.1	2.0	2.5	57.1	62.8	30.0	50S	BW	1AA	PVC16	0.468
50	M50	15.0	44.1	55.7	2.0	2.5	65.0	71.5	32.0	50	BW	1AA	PVC19	0.477
63S	M63	15.0	50.0	62.4	2.0	2.5	75.0	82.5	41.3	63S	BW	1AA	PVC23	0.632
63	M63	15.0	56.0	68.2	2.0	2.5	79.0	86.9	41.3	63	BW	1AA	PVC24	0.890
75S	M75	15.0	62.0	76.8	2.0	2.5	89.0	97.9	47.6	75S	BW	1AA	PVC27	1.268
75	M75	15.0	68.0	82.9	2.5	3.0	95.0	104.5	49.6	75	BW	1AA	PVC29	1.400

**For material options add the following suffix to the Ordering Reference; Brass (no suffix required); Nickel Plated Brass '5'*

Example: 32BW1RA5 = Nickel Plated Brass

Dimensions are displayed in millimetres unless otherwise stated

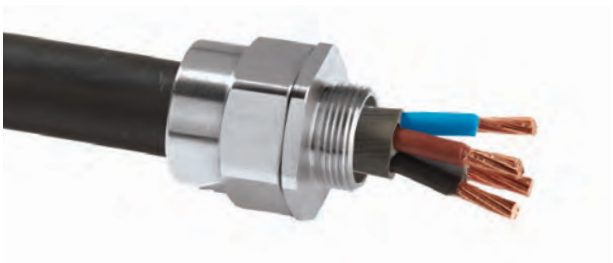

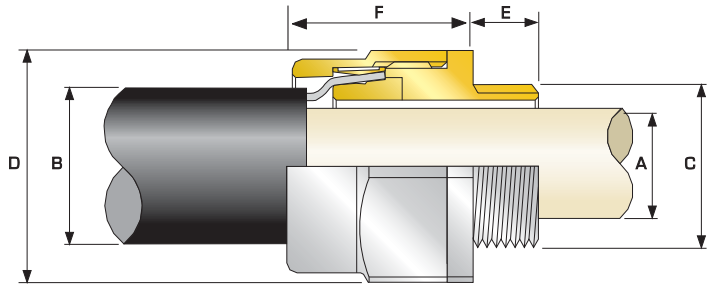

BWL

BWL Heavy Duty Industrial Cable Gland

For all types of Steel & Aluminium Wire Armoured Cables

- High quality durable materials
- Simple, effective two part arrangement
- Metal-to-metal armour clamping
- Direct & remote installation
- Permanently crimped, low impedance earth termination
- Secure against self-loosening
- Robust, heavy duty design
- Longer body protects armour wires from impact
- -60˚C to +200˚C
- EMC tested

TECHNICAL DATA	
Design Specification	BS 6121: Part 1: 1989
Mechanical Classifications*	Impact = Level 8, Retention = Class D
Enclosure Protection	IK10 to IEC 62262 (20 joules)
Electrical Classifications*	Category B
GOST R Certificate	РОСС GB.ГБ 05.H00187
GOST K Certificate	KZ 7500361.01.01.25266
RoK Permit For Use	19-02-UL-1957
Marine Approvals	LRS: 01/00171 (E1), ABS: 01-LD234401/2-PDA
Continuous Operating Temperature	-60°C to +200°C
Ingress Protection Rating	IP2X**
Cable Gland Material	Brass, Electroless Nickel Plated Brass
Cable Type	Single Wire Armour (SWA), Aluminium Wire Armour (AWA)
Armour Clamping	Detachable Armour Cone & AnyWay Universal Clamping Ring

*Note : * Mechanical & Electrical Classifications applied as per IEC 62444 & EN 62444*
As IEC 62444 and EN 62444 do not cover cable glands which are supplied without cable sealing rings, the information provided here is for information only.
*Note : ** Refer to page 7 or www.cmp-products.com for further information on Ingress Protection Ratings*

Cable Gland Selection Table

Refer to illustration at the top of the page

Cable Gland Size	Available Entry Threads "C" (Alternate Metric Thread Lengths Available)		Cable Bedding Diameter "A"	Overall Cable Diameter "B"	Armour Range		Across Flats "D"	Across Corners "D"	Protrusion Length "F"	Combined Ordering Reference (*Brass Metric)			Shroud	Cable Gland Weight (Kgs)
	Metric	Thread Length (Metric) "E"	Max	Max	Min	Max	Max	Max		Size	Type	Ordering Suffix		
20S16	M20	10.0	8.7	13.2	0.8	1.25	24.0	26.4	35.2	20S16	BWL	1RA	PVC04	0.084
20S	M20	10.0	11.7	15.9	0.8	1.25	24.0	26.4	32.2	20S	BWL	1RA	PVC04	0.076
20	M20	10.0	14.0	20.9	0.8	1.25	30.5	33.6	30.6	20	BWL	1RA	PVC06	0.117
25	M25	10.0	20.0	26.2	1.25	1.6	36.0	39.6	36.4	25	BWL	1RA	PVC09	0.155
32	M32	10.0	26.3	33.9	1.6	2.0	46.0	50.6	32.6	32	BWL	1RA	PVC11	0.220
40	M40	15.0	32.2	40.4	1.6	2.0	55.0	60.5	36.6	40	BWL	1RA	PVC15	0.370
50S	M50	15.0	38.2	46.7	2.0	2.5	60.0	66.0	39.6	50S	BWL	1RA	PVC18	0.468
50	M50	15.0	44.1	53.1	2.0	2.5	70.1	77.1	39.1	50	BWL	1RA	PVC21	0.434
63S	M63	15.0	50.0	59.4	2.0	2.5	75.0	82.5	52.0	63S	BWL	1RA	PVC23	0.846
63	M63	15.0	56.0	65.9	2.0	2.5	80.0	88.0	49.8	63	BWL	1RA	PVC25	0.818
75S	M75	15.0	62.0	72.1	2.0	2.5	90.0	99.0	63.7	75S	BWL	1RA	PVC28	1.486
75	M75	15.0	68.0	78.5	2.5	3.0	100.0	110.0	57.3	75	BWL	1RA	PVC30	1.662
90	M90	24.0	80.0	90.4	3.15	4.0	114.3	125.7	66.6	90	BWL	1RA	PVC32	2.460

**For material options add the following suffix to the Ordering Reference; Brass (no suffix required); Nickel Plated Brass '5'*
Example: 32BWL1RA5 = Nickel Plated Brass
Dimensions are displayed in millimetres unless otherwise stated